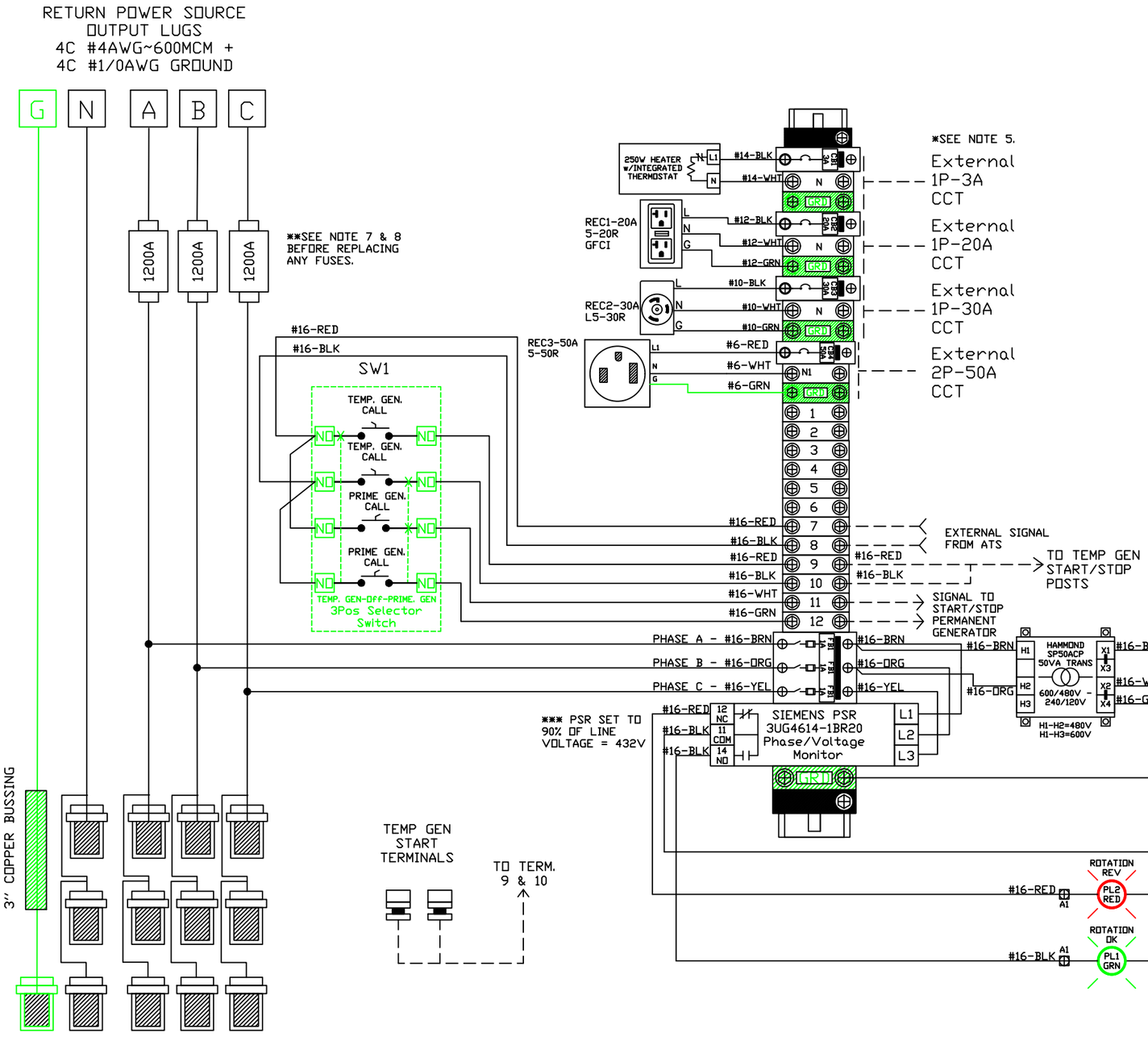

TEMP. GENERATOR CONNECTION
MALE CAMLOCKS
3 PER PHASE + 1 GROUND

BILL OF MATERIALS					
REF.	MFR	P/N	DESCRIPTION	QTY	REV
CB1	SIEMENS	5SJ4103-7HG40	1P. 3A, 120V, RAIL MOUNTED BREAKER, UL489	1	A
CB2	SIEMENS	5SJ4120-7HG40	1P. 20A, 120V, RAIL MOUNTED BREAKER, UL489	1	A
CB3	SIEMENS	5SJ4130-7HG40	1P. 30A, 120V, RAIL MOUNTED BREAKER, UL489	1	A
CB4	SIEMENS	5SJ4150-7HG40	1P. 50A, 120V, RAIL MOUNTED BREAKER, UL489	1	A
REC1	LEVITON	GFNT2-W	1P, 20A, 5-20R, GFCI RECEPTACLE	1	A
REC2	LEVITON	2610	1P, 30A, L5-30R, TWIST-LOCK RECEPTACLE	1	A
REC3	LEVITON	5373	50A, 125V, NEMA 5-50R, 2P, 3W, FLUSH Mtg RECEPTACLE	1	A
HEAT1	STEGO	028219-06	250W, HEATER & BLOWER, INCLUDES FIXED 5DEG C THERMOSTAT	1	A
PSR1	SIEMENS	3UG4614-1BR20	PHASE SEQUENCE RELAY, 160~690V, PROGRAMMABLE	1	A
TRAN1	HAMMOND	SP50ACP	50VA, 600/480V - 240/120V CONTROL TRANSFORMER	1	A
FB1	MERSEN	USCC3 + 3x ATQR1	3P FUSE HOLDER, CC TYPE + 3 X 1A FUSES	1	A
PL1	SIEMENS	3SU1051-6AA40-0AA0, 3SU1401-1BH40-1AA0, 3SU1550-0AA10-0AA0	22mm GREEN PILOT LIGHT, LED, & HOLDER	1	A
PL2	SIEMENS	3SU1051-6AA20-0AA0, 3SU1401-1BH20-1AA0, 3SU1550-0AA10-0AA0	22mm RED PILOT LIGHT, LED, & HOLDER	1	A
SW1	SIEMENS	3SU1052-2BL60-0AA0	3-POSITION SELECTOR SWITCH	1	A
	SIEMENS	3SU1400-1AA10-1BA0	NO CONTACT	4	A
	SIEMENS	3SU1550-0AA10-0AA0	SELECTOR SWITCH HOLDER	1	A
POST	CIRC-TEST	375-591-10	TERMINAL POSTS (BANANA PLUGS AND/OR WIRE POST)	2	A
FU1/2/3	MERSEN	A4BY1200	3P-1200A, CLASS-L TIME DELAY POWER FUSE	3	A

NOTES:

1. ALL NEUTRAL CIRCUITS ARE ISOLATED FROM GROUND.
2. 3PH, 4WIRE SYSTEM. UNSWITCHED NEUTRAL.
3. TWO-WIRE AUTO-START SIGNAL DESTINATION SWITCH CALLS EITHER TEMPORARY GENERATOR OR PERMANENT GENERATOR.
4. NOT SUITABLE FOR SERVICE ENTRANCE APPLICATIONS. CONSULT FACTORY FOR ALTERNATIVES.
5. REC1, REC2, REC3, AND HEATER REQUIRE SEPARATE 120V EXTERNAL SOURCES.
6. 3X 1200A CLASS-L POWER FUSES INCLUDED IN SCOPE OF SUPPLY.
7. ENSURE UPSTREAM GENERATOR BREAKER IS LOCKED-OUT IN THE "OFF" POSITION BEFORE SERVICING POWER FUSES.
8. DOWNSTREAM DISCONNECTING MEANS MUST BE PROVIDED TO REMOVE ANY POSSIBILITY OF POWER FUSE BACK FEED.
9. PHASE SEQUENCE RELAY PROGRAMMED TO 90% OF LINE VOLTAGE (432V). FIELD ADJUSTABLE.
10. GROUND BUS SHALL BE SIZED TO HANDLE THE AMPACITY EQUAL TO 50% OF TOTAL SYSTEM CURRENT (600A).
11. ETL1008 LISTED.

ELECTRICAL SPECIFICATIONS	
SUPPLY VOLTAGE	480Y/277Vac
SUPPLY CURRENT	1200A RMS
PHASE/FREQ.	3PH, 4W, 60Hz
ASSEMBLY SCCR	65kA RMS SYM
ENCL. RATING	TYPE 3R-ALU
CERTIFICATIONS	ETL 1008

PROPRIETARY AND CONFIDENTIAL

THE INFORMATION CONTAINED IN THIS DRAWING IS THE SOLE PROPERTY OF FOXFAB METAL WORKS ANY REPRODUCTION IN PART OR AS A WHOLE WITHOUT THE WRITTEN PERMISSION OF FOXFAB METAL WORKS IS PROHIBITED.

DRAWN BY: AC
CREATED ON: 2025-07-15

UNLESS OTHERWISE SPECIFIED:
DIMENSIONS ARE IN INCHES
TOLERANCES:
X ± 1 XX ± .5
X.XX ± 1 XXXX ± .1
ANGULAR ±1.5
INTERPRET DIM AND TOL. PER: ASME Y14.5
THIRD ANGLE:

FOXFAB POWER SOLUTIONS
1579 - 188 ST, SURREY, B.C. V3Z 1A1
TEL: 604-460-9310 FAX: 604-460-9317
WWW.FOXFAB.COM

TITLE: J15353 - BATESVILLE

FFCC-C1-1200-U4-G-ALU-LA-AC-AF-2WDSD-AD2-AD3-AD5-AG-FUS

SIZE	SCALE	SHEET	REV
B	NTS	1 OF 1	1.5

REVISION				
REV.	ZONE	DESCRIPTION	DATE	DRAWNBY

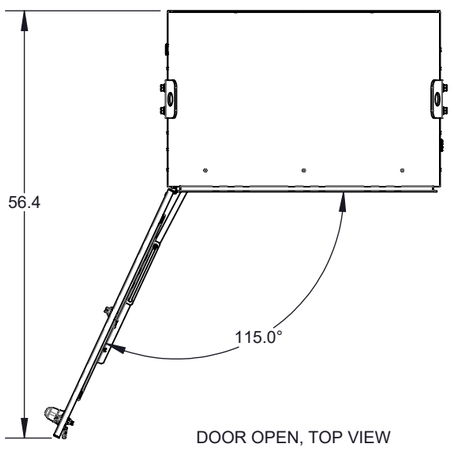

DOOR OPEN, TOP VIEW

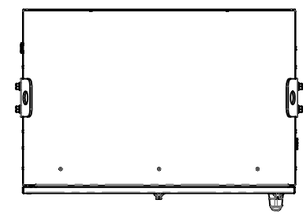

TOP VIEW

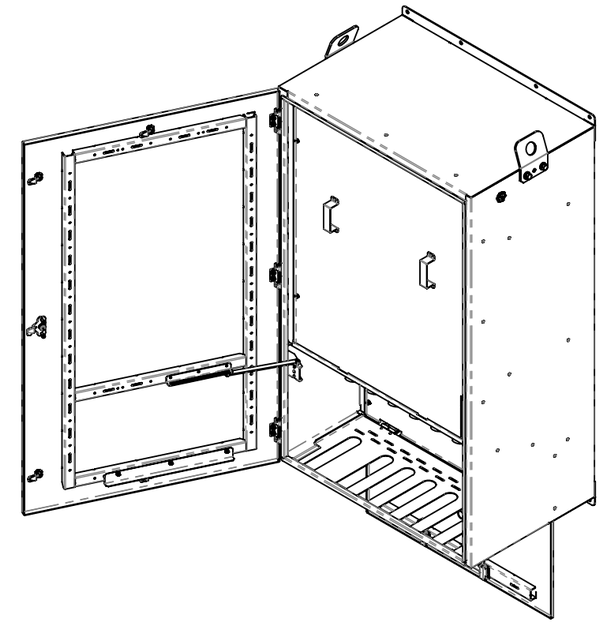

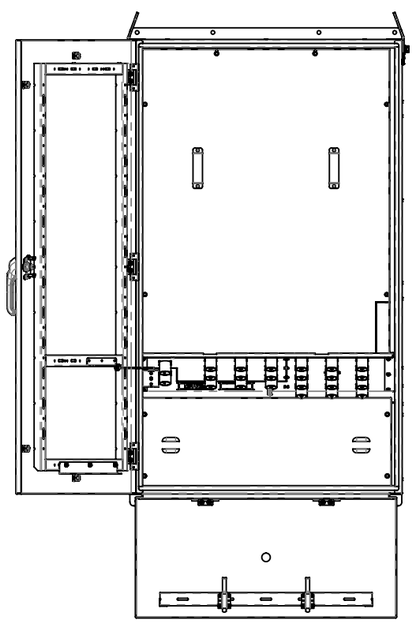

DOOR OPEN, FRONT VIEW

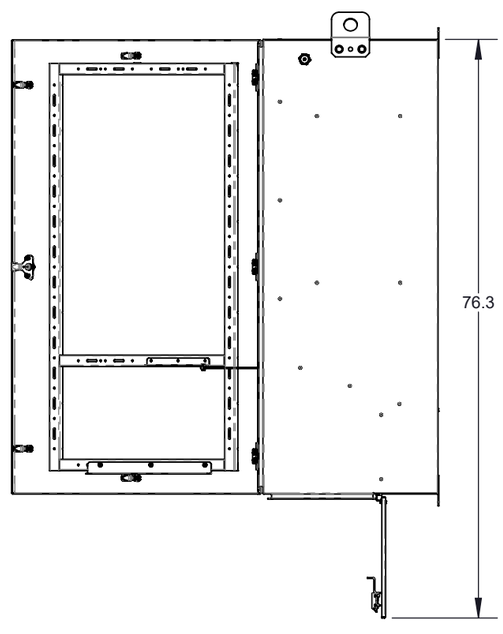

DOOR OPEN, SIDE VIEW

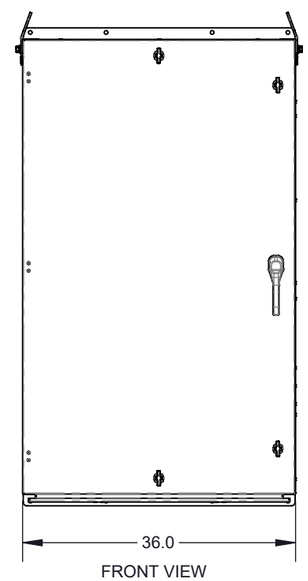

FRONT VIEW

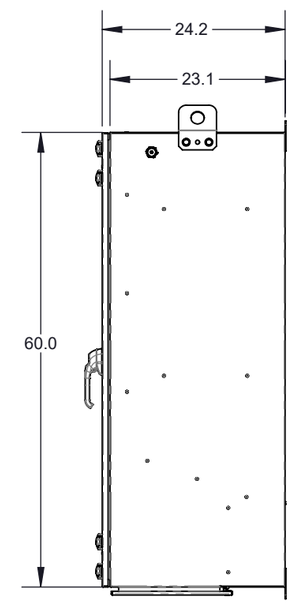

SIDE VIEW

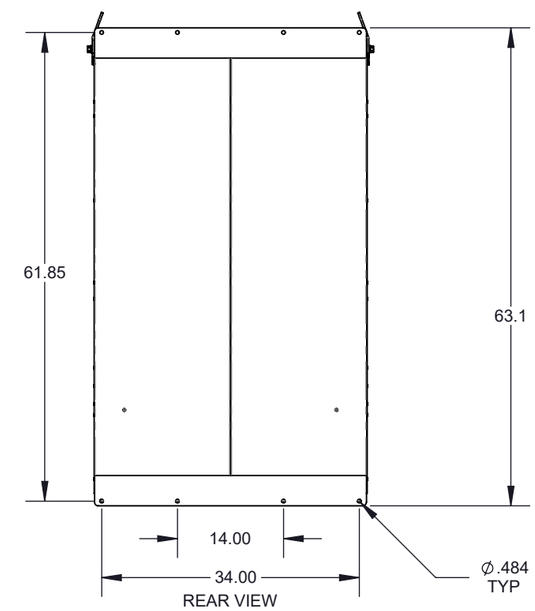

REAR VIEW

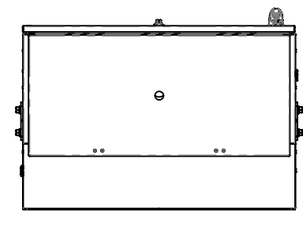

BOTTOM VIEW

MATERIAL 501.70 lbs PER NOTES	DRAWN BY AG	SAVED ON 7/25/2025	Foxfab Power Solutions 2579-188 ST. SURREY, BC V3Z 2A1 (604) 460 - 9310 WWW.FOXFAB.COM
FINISH PC PER NOTES	BD - / TOP DIE - / BOTTOM DIE -		TITLE: FFCC-C1-1200-U3-GL-3044X-LA-AF-AF2-AD2
PROPRIETARY AND CONFIDENTIAL THE INFORMATION CONTAINED IN THIS DRAWING IS THE SOLE PROPERTY OF FOXFAB POWER SOLUTIONS. ANY REPRODUCTION IN PART OR AS A WHOLE WITHOUT THE WRITTEN PERMISSION OF FOXFAB POWER SOLUTIONS IS PROHIBITED.	UNLESS OTHERWISE SPECIFIED: DIMENSIONS ARE IN INCHES TOLERANCES: X ± 2 X.X ± .5 X.XX ± .2 X.XXX ± .1 ANGULAR ± 1.5 INTERPRET DIM AND TOL. PER: **ASME Y14.5**	THIRD ANGLE:	SIZE **B** / SCALE 1:24 / REV A
		ITEM NO. / DWG. NO. 003-80148-LAY	SHEET 1 OF 2